4611110058815

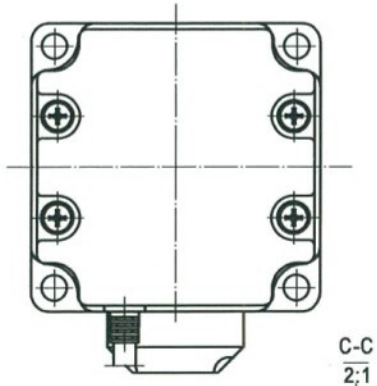

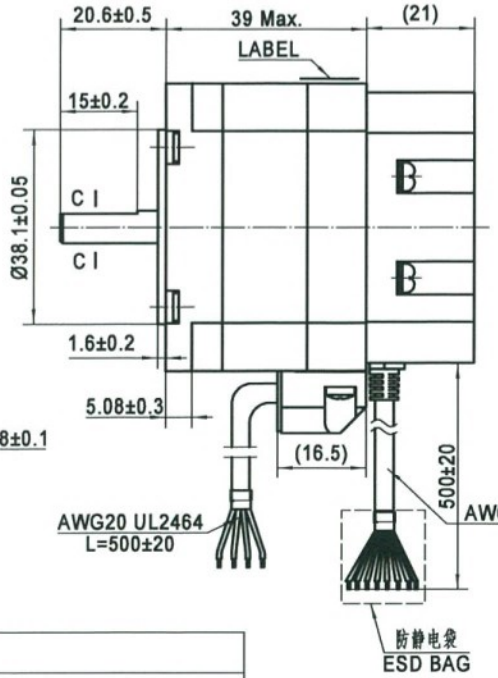

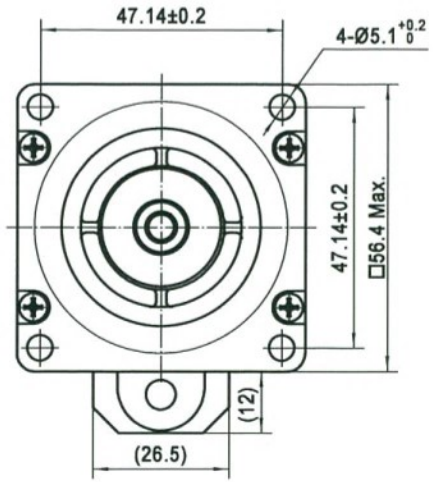

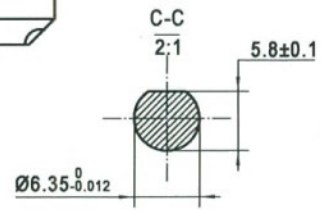

接线图

Wiring Diagram

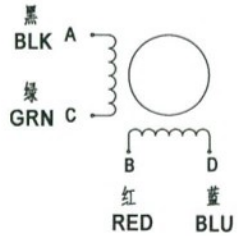

励磁顺序 vs. 旋转方向

Exciting Sequence vs. Direction of Rotation

STEP	A	B	C	D
1	+	+	−	−
2	−	+	+	−
3	−	−	+	+
4	+	−	−	+

CW ↓ ↑ CCW

从安装面看为顺时针方向

Clockwise view from mouting side.

规格 Specifications

1. 相数 Number of Phase	2
2. 步距角 Step Angle	1.8°
3. 额定电压 Rated Voltage	6.3 V DC
4. 额定电流 Rated Current	1.0 Amp
5. 保持力矩 Holding Torque	0.82 Nm Typ. (Two phase on/ rated current)
6. 相电阻 Phase Resistance	6.3 ohm±10% (20℃)
7. 相电感 Phase Inductance	13.5 mH±20%(1kHz 1V rms)
8. 转子惯量 Rotor Inertia	105 g.cm^2
9. 电机重量 Motor Weight	0.43 kg
10. 绝缘等级 Insulation Class	B(130℃)

编码器 Encoder Detail

型号(Model): AM4096-1024P/R（1024线）

COLOR	WHT(白)	BLU(蓝)	GRN(绿)	ORG(橙)
SIGNAL	CH A+	CH A-	CH B+	CH B-
COLOR	YEL(黄)	BRN(棕)	RED(红)	BLK(黑)
SIGNAL	CH Z+	CH Z-	+Vcc	GND

电机动力线断面

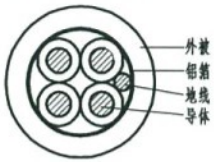

编码器线断面

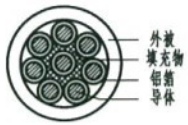

铭牌 Label Detail

MOONS' STEPPING MOTOR
TYPE ML23HS0L4100-05R
XXXXXXXX YY/MM/DD

Work Order 加工单号 — Date Format 日期格式

REV.	版本记录 REVISION RECORD	DATE
A0	原始版本 Original revision	2021.09.22

Unit: mm
第一角画法
FIRST ANGLE METHOD
未注线性与角度尺寸公差
Tolerances for linear and angular dimensions without individual tolerance indications
GB/T 1804-m eqv ISO 2768-1: m
未注形状与位置尺寸公差
Geometrical tolerance for features without individual tolerance indications
GB/T 1184-K eqv ISO 2768-2: K

UNLESS OTHERWISE SPECIFIED

	NAMES	SIGNATURE	DATE
批准 Approve			
标准化 Standard			
工艺 Technology			
审核 Check			
设计 Design			

MOONS'

Hybrid Stepping Motor

Shanghai MOONS' Electric Co., Ltd.

This document is released for information only. Its reproduction in whole or in part or its dissemination to third parties is prohibited. All trademarks and registered trademarks appearing on this document are the property of their respective owners.

Type: ML23HS0L4100-05R | Rev. A0 | SCALE 1:1 | Sheet 1 of 1